HAGERMAN
TECHNOLOGY

HagClock

Low Jitter Clock Upgrade

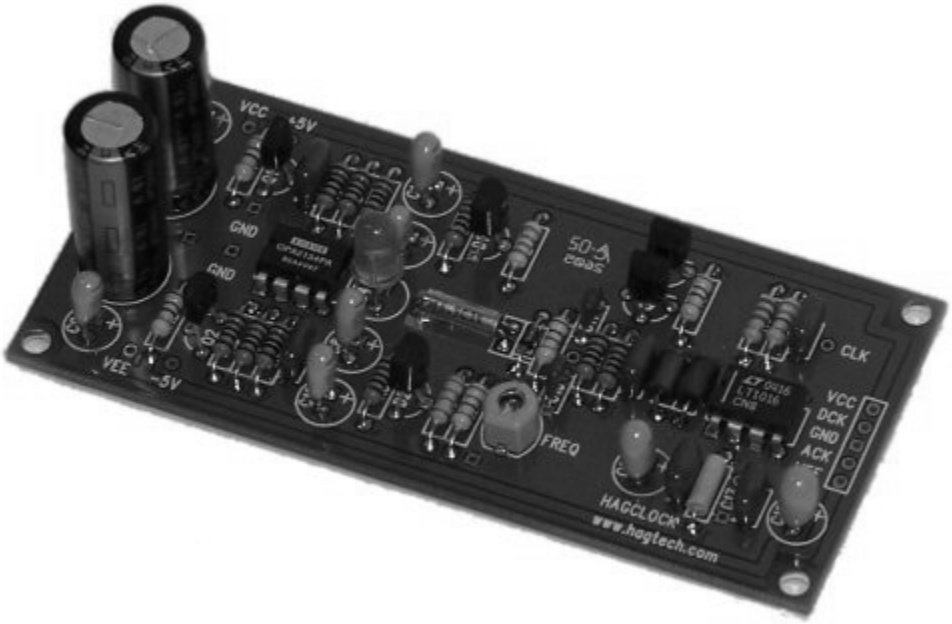

Made in USA

Copyrights & Trademarks

Disclaimer

The information contained in this document is subject to change without notice. Hagerman Technology LLC shall not be liable for errors contained herein or for consequential damages in connection with the furnishing, performance, or use of this material. HagClock must be installed by a qualified dealer or experienced technician.

Warranty

Hagerman Technology LLC warrants this product free of defects in materials and workmanship for a period of 10 years. If you discover a defect, Hagerman Technology LLC will, at its option, repair or replace the product at no charge to you provided you return it during the warranty period, transportation charges prepaid to Hagerman Technology LLC. This warranty does not apply if the product has been damaged by negligence, accident, abuse or misuse or misapplication, has been damaged because it has been improperly connected to other equipment or has been modified without the express written permission of Hagerman Technology LLC. This warranty is limited to the replacement or repair of this product and not to damage to equipment of other manufacturers. Any applicable implied warranties, including warranty of merchantability, are limited in duration to a period of the express warranty as provided herein beginning with the original date of purchase and no warranties, whether express or implied shall apply to the product thereafter. Under no circumstances shall Hagerman Technology LLC be liable for any loss, direct, indirect, incidental, special, or consequential damage arising out of or in connection with the use of this product.

Hagerman Technology LLC
PO Box 26437
Honolulu, HI 96825
808-383-2704 (voice)
808-394-6076 (fax)
www.hagtech.com

Description

The HagClock is a high performance clock circuit designed specifically for upgrading most CD players and transports. Onboard super-regulators provide ideal power supply conditions for the low phase noise (low jitter) reference oscillator section. A special output buffer provides accurate transmission of the clock into your CD player's circuitry.

HagClock can be mounted inside most transports and taps off of their existing power supply rails. Requires dealer installation by a qualified technician.

Package Contents

- HagClock
- Wiring
- 100 ohm termination resistor

Specifications

Item	Specification
Frequency	11.2896MHz or 16.9344MHz (+/-5ppm)
Jitter	<5ps rms
Supply Voltage	+/-8V to +/-16V
Supply Current	+45mA, -20mA
Startup Delay	<100ms
Rise/Fall Time	<5ns (20% to 80%)

Installation

First, locate the existing crystal within the CD transport. Make sure it is either a 11.2896M or 16.9344M type, and use the appropriate HagClock. Find a location within the chassis to mount the clock. Place it as close to the existing crystal as possible. Use the board itself to mark holes for drilling.

Identify the other existing oscillator components by tracing the layout (the circuit should be as shown in the schematic below). You may have to do a little Internet research and download the data sheet for the integrated circuit used. This will help determine the input and output pins, **RBIAS**, **XTAL**, **CIN**, and **COUT**. Locate the +/-12V (+/-8V to +/-16V) analog power supplies (they will normally be used for the opamps in the output stage). The only ground connection will be in the clock output.

Some transports employ surface mount components. It is easier to remove them with two soldering irons, one on each side of the component. Save all removed parts in case you want to restore the transport to its original configuration!

Proceed as follows:

- Remove **XTAL**, **CIN**, and **COUT**.
- Solder one lead of the 100 ohm resistor to the clock input (top of **CIN**).
- Trim twisted pair output leads as short as possible. Solder the **GND** lead to the bottom of **CIN**, and the **ACLK** lead to the 100 ohm resistor.
- Solder the **VCC** wire to +12V, and **VEE** to –12V.

Testing

Apply power; the LED should immediately light up. Using an oscilloscope, confirm oscillator action by measuring the output. CD transport should function normally.

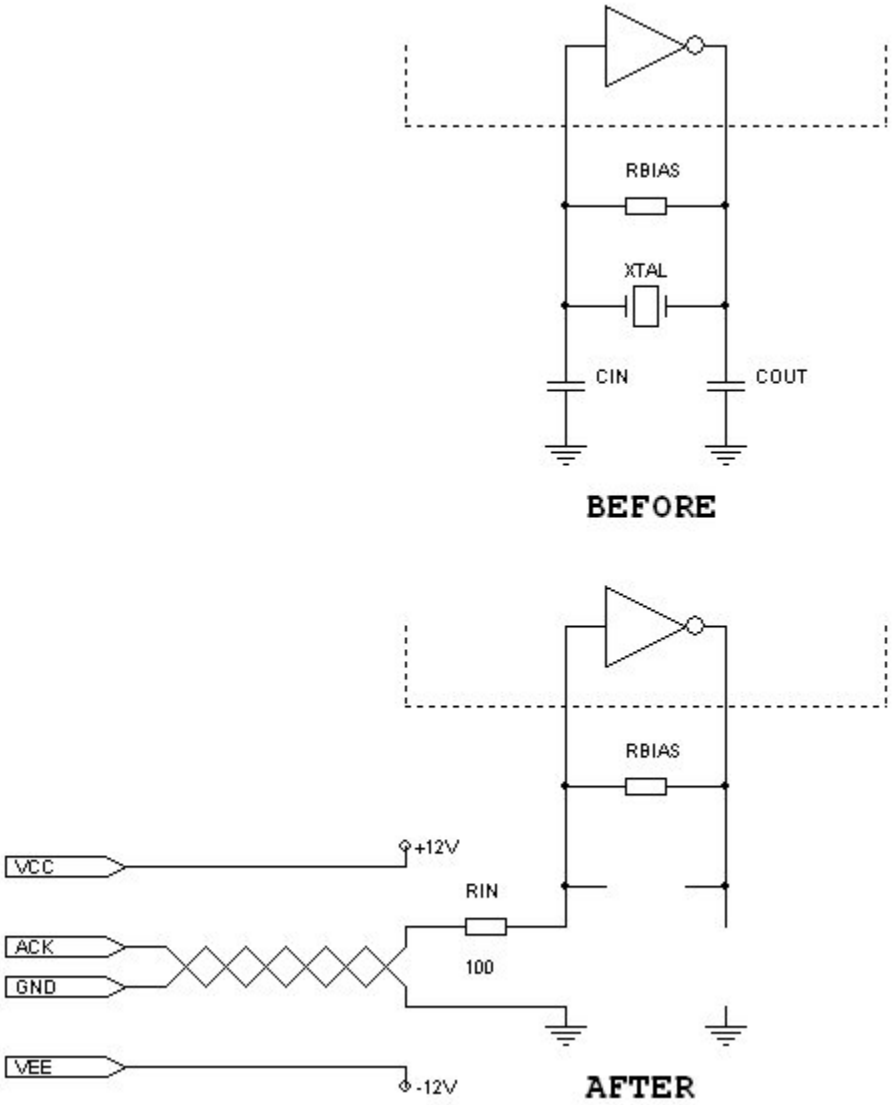

CD transport oscillator modifications, wiring.

Troubleshooting

Problem	Solution
LED does not light up.	Correct power not supplied.
CD player locks up.	Wrong frequency used? Double check installation. Could also be that the start-up delay of the reference oscillator is too long.

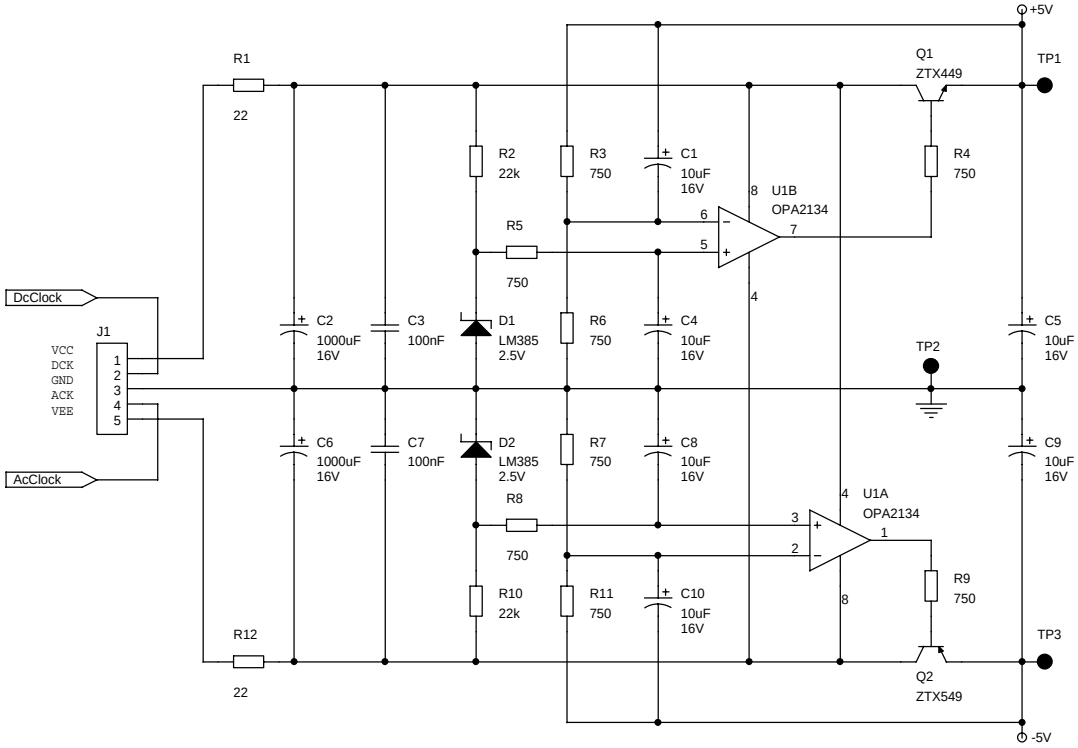

Hagerman Technology LLC
P.O. Box 26437
Honolulu, HI 96825

Title
Constructor: HagClock Regulators

Size	Document Number	Rev
	n/a	A

Date: **Friday, June 24, 2005** Sheet **1** of **2**

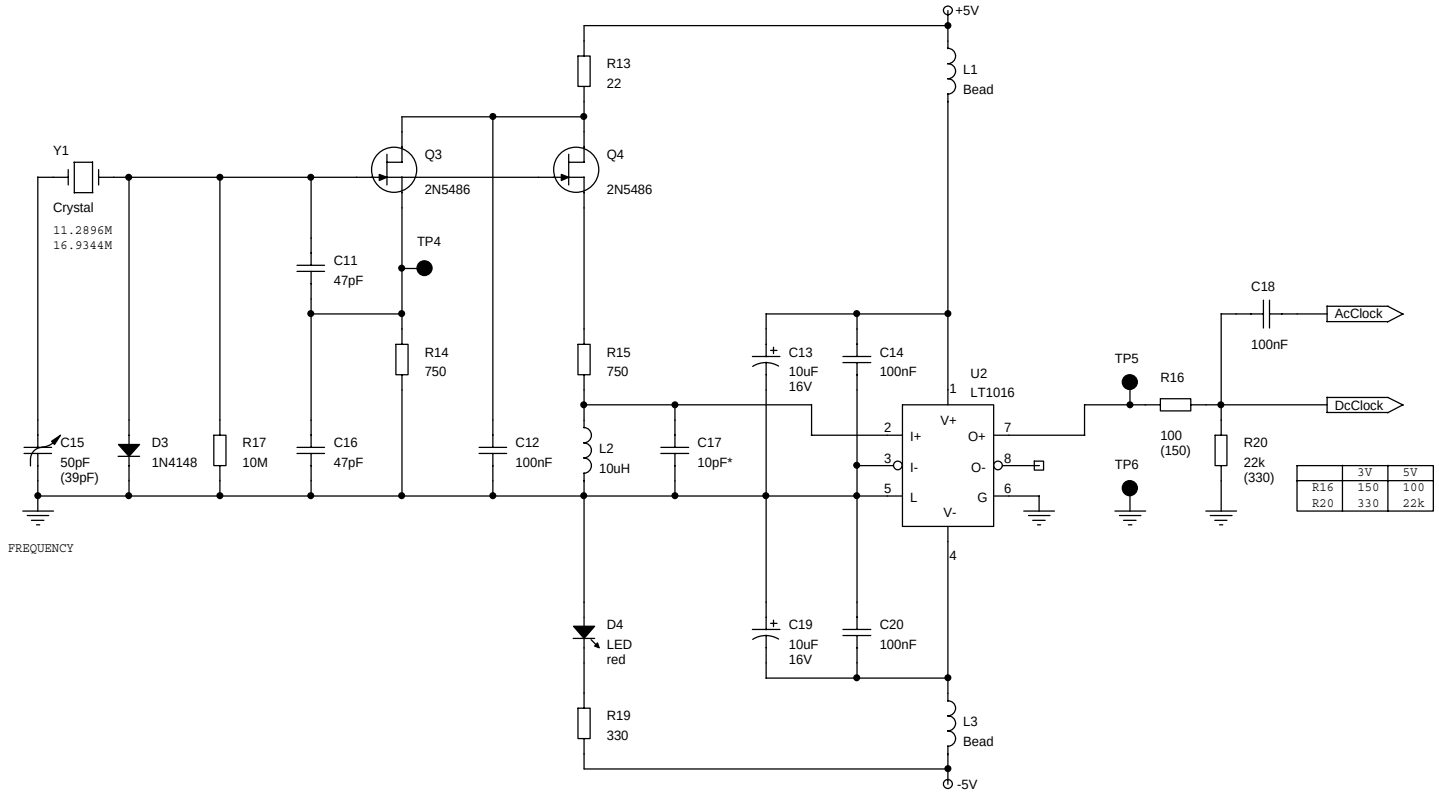

	3V	5V
R16	150	100
R20	330	22k

Hagerman Technology LLC
P.O. Box 26437
Honolulu, HI 96825

Title
Constructor: HagClock Oscillator

Size	Document Number	Rev
	n/a	A

Date: **Friday, June 24, 2005** Sheet **2** of **2**